PLASTIC THREAD TYPE DIAPHRAGM SEAL

DT114

Approvals:

Application

DT114 diaphragm seal is made with material including, special plastic to provide to against the acid fluid for application in customers device. Its easy to assemble with pressure gauges, pressure switches and pressure transducers.

Technical Data

Instrument connection: Female thread ¼" to ½" BSP or NPT
Membrane size: Ø55, Ø75
Process connection: ¼" to ½" BSP or NPT
Measurement range: -760mmHg ~ 0 ~ 2.5 kg/cm² (Ø75 Membrane)
0 ~ 6 kg/cm² (Ø55 Membrane)
Max. temperature: Up to 120°C
Material: Upper housing - SS316 (standard); Low housing - P.V.C, P.P, PVDF, Teflon available
Membrane material: SS316L+Teflon lining (standard); Options - Hastelloy C276, Tantalum, and others on requset.

Dimensions

Item	Description of Parts
a	Upper housing
b	Low housing
c	Membrane
d	Instrument connection
e	Filling port
f	Supporting ring
g	Screw bolt

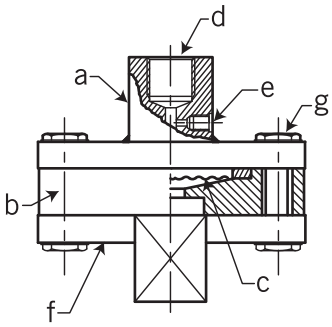

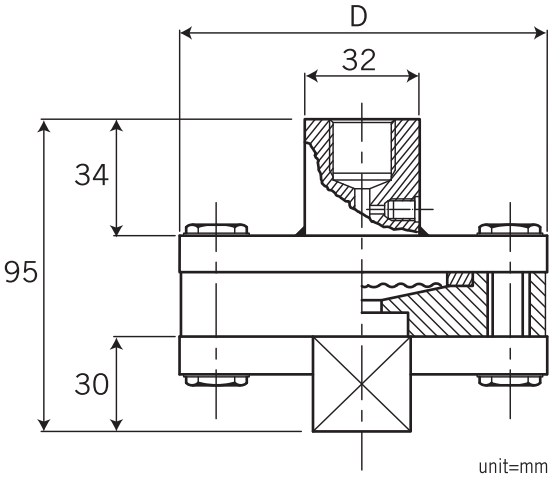

Membrane size		
Ø	55	75
D	80	100

Ordering Information

DT114	Code	Instrument Connection Size (Female)
		(A) ¼"BSP (B) ¼"NPT (C) ⅜"BSP (D) ⅜"NPT (E) ½"BSP (F) ½"NPT

Code	Membrane Size
	(1) ø55 (2) ø75

Code	Process Connection Size
	(A) ¼" (B) ⅜" (C) ½"

Code	Process Connection Thread
	(A) NPT (male) (B) NPT (female) (C) PF (male) (D) PF (female)

Code	Upper Housing Material
	(S) SS316 (O) option

Code	Lower Housing Material
	(V) PVC (P) P.P (T) Teflon (PV) PVDF

Code	Membrane Material
	(H) Hastelloy C276 (Ta) Tantalum (Tf) SS316L+Teflon lining (O) option

DT114								Complete ordering code

WWW.NEW-FLOW.COM • TEL: 886-7-8135500 • FAX: 886-7-8225588 • Email: info@new-flow.com