VARIABLE AREA TYPE FLOW METER (ROTAMETER)

M-TYPE

Technical Data

A. Measuring The Flow Rate For
- Gases & Liquid
- Chemical process system
- Water treatment system
- Industrial flow system

B. Service Condition
- Viscosity: ≤ 3 cP
- Max. working temperature: Metal: 100°C; Plastic: 60°C
- Max. working pressure:
  (1) Body material: MS: 15 kg/cm²
  MV: 6 kg/cm²
  (2) Glass tube: Borosilicate glass 6 kg/cm², Instant pressure: 8 kg/cm²
  (3) P.C tube: 10 kg/cm², Instant pressure: 15 kg/cm²

C. Alarm Switch Available (N.O), IP67
- Switch rating: AC 125V 0.5A / DC 100V 10W / Max. DC 250V < 40mA

D. Accuracy: ±4%F.S

Operation Principle

The variable area flow meter content a float & taper tube. The fluid flow through the taper tube and force up to the float. The flow rate is measured as a function of the area of the opening. This area displayed as the float that is free to move to produce the varying area.

Approvals:

Dimensions

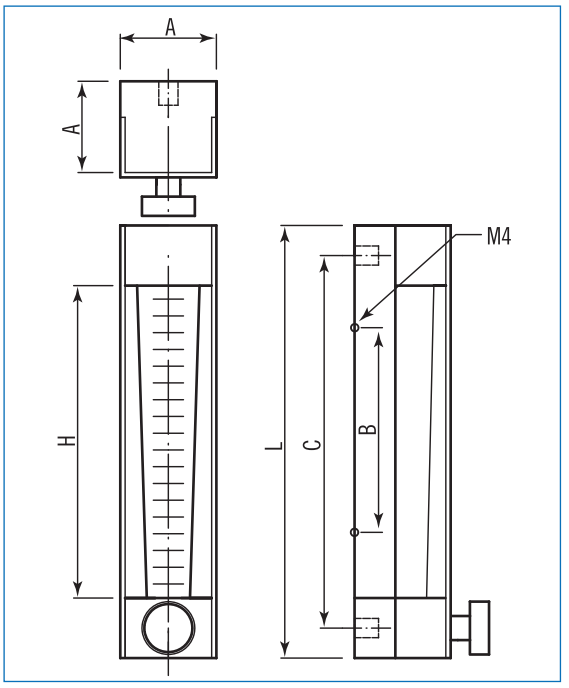

unit=mm

Range / Size	H_2O (Max.) L/Min	Air (Max.) NL/Min	Dimension					
			PT/NPT	L	H	A	C	B
6A	0.03~0.3	0.5~5.0	1/4"	168	110	25	145	75
10A	0.1~1.0	2~20	3/8"	168	110	25	145	75
15A	1~10	20~200	1/2"	242	165	32	210	100
20A	2~20	30~300	3/4"	290	220	42	240	140
25A	5~50	80~800	1"	295	230	46	250	140
25A	–	150~1500	1"	295	230	46	250	140

Ordering Information

M-Type	Code	Model		
	MS	Wetted parts are stainless steel	MV	Wetted parts are plastic

Code	Size
	(1) 6A (2) 10A (3) 15A (4) 20A (5) 25A

Code	Connection Rating
	(1) NPT (2) PT (3) option

Code	Body Material
	(1) SS304 (2) SS316 (3) SS316L (4) P.V.C
	(5) P.P (6) PVDF (7) Option

Code	Indicating Tube Material
	(1) Borosilicate glass (2) PC

Code	Float Material
	(1) SS304 (2) SS316
	(3) P.V.C (4) P.P (5) PVDF
	(6) Teflon (0) option

Code	Seal Material
	(1) NBR (2) Viton (3) Teflon

Code	Protection Supporter Material
	(1) SS304 (2) SS316

Code	Flow Range
L	0.03~50 L/min for liquid
G	0.5~1500 NL/min for gases

Code	Flow Direction
1	Horizontal
2	Vertical

Code	Alarm Switch
1R	One setting point
2R	Two setting point
0	Without alarm

M-Type							+					

WWW.NEW-FLOW.COM • TEL: 886-7-8135500 • FAX: 886-7-8225588 • Email: info@new-flow.com